PRODUCT DATA SHEET

PANELTWISTEC AG

PRODUCT DESCRIPTION

Paneltwistec AG made of blue galvanised and hardened carbon steel is a wood construction screw with a special screw tip and milling **ribs above the thread.** The screw is available in two versions, one with a countersunk head and one with a washer head. The special geometry of the screw tip reduces the torque needed to drive it in and **minimises the risk of the timber splitting.**

ADVANTAGES

- Quicker and easier to screw in
- Minimal splitting effect
- ETA - European Technical Assessment
- Usable in service classes 1 and 2
- Free from chromium(VI) oxide
- Screws can be screwed in smoothly thanks to the TX drive

MATERIAL

- Hardened carbon steel, blue galvanised
- Not suitable for wood containing tannins!

IMAGES OF APPLICATIONS

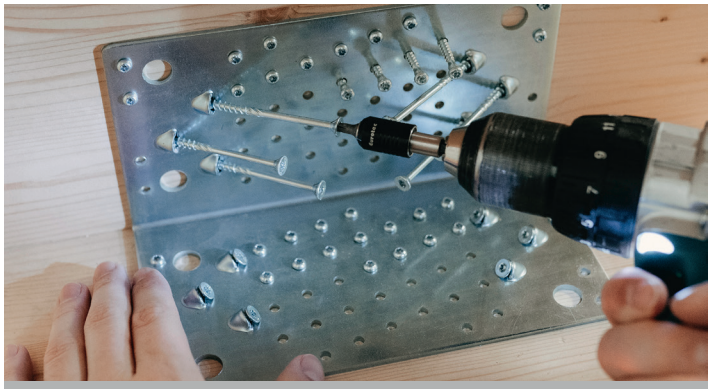

Fixing of fasteners (steel-timber connectors)

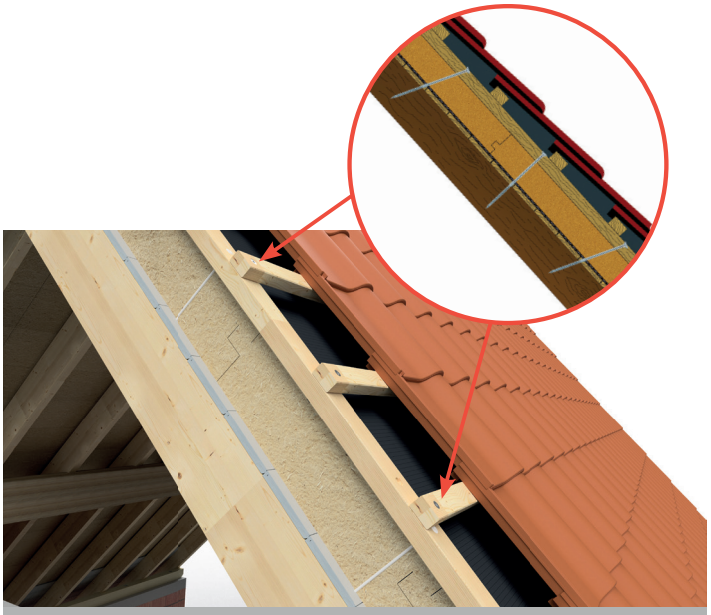

Wood-wood connections (rafter-level insulation)

© by E.u.r.o.Tec GmbH · Last updated 04/2023 · Subject to changes, additions, typesetting and printing errors.

E.u.r.o.Tec GmbH • Unter dem Hofe 5 • 58099 Hagen, Germany
Tel. +49 (0)2331 62 45-0 • Fax +49 (0)2331 62 45-200 • Email info@eurotec.team
www.eurotec.team

PRODUCT DATA SHEET

PANELTWISTEC AG

CERTIFICATION

- European Technical Assessment ETA-11/0024 Self-tapping screws as wood connectors
- Paneltwistec wood construction screws from Ø 6.0, also suitable for fastening rafter insulation systems (Ø 8.0 is used as standard)

Europ. Techn. Bewertung
European Technical Assessment
ETA-11/0024

PRODUCT TABLE

Paneltwistec AG, countersunk head screw, blue galvanised steel			
Art. no.	Dimensions Ød x L [mm]	Drive	PU
945436	3.5 x 30	TX15 ●	1000
945838	3.5 x 35	TX15 ●	1000
945437	3.5 x 40	TX15 ●	1000
945490	3.5 x 50	TX15 ●	500
945491	4.0 x 30	TX20 ●	1000
945836	4.0 x 35	TX20 ●	1000
945492	4.0 x 40	TX20 ●	1000
945493	4.0 x 45	TX20 ●	500
945494	4.0 x 50	TX20 ●	500
945495	4.0 x 60	TX20 ●	200
945496	4.0 x 70	TX20 ●	200
945497	4.0 x 80	TX20 ●	200
945498	4.5 x 40	TX25 ●	500
945588	4.5 x 45	TX25 ●	500
945499	4.5 x 50	TX25 ●	500
945567	4.5 x 60	TX25 ●	200
945568	4.5 x 70	TX25 ●	200
945569	4.5 x 80	TX25 ●	200
945574	5.0 x 40	TX25 ●	200
945837	5.0 x 45	TX25 ●	200
945575	5.0 x 50	TX25 ●	200
945576	5.0 x 60	TX25 ●	200
945577	5.0 x 70	TX25 ●	200
945578	5.0 x 80	TX25 ●	200
945579	5.0 x 90	TX25 ●	200
945580	5.0 x 100	TX25 ●	200
945581	5.0 x 120	TX25 ●	200
945600	5.0 x 50	TX30 ●	200
945601	5.0 x 60	TX30 ●	200
945602	5.0 x 70	TX30 ●	200
945603	5.0 x 80	TX30 ●	200
945604	5.0 x 90	TX30 ●	200
945605	5.0 x 100	TX30 ●	200
945607	5.0 x 120	TX30 ●	200

© by E.u.r.o.Tec GmbH · Last updated 04/2023 · Subject to changes, additions, typesetting and printing errors.

E.u.r.o.Tec GmbH • Unter dem Hofe 5 • 58099 Hagen, Germany
Tel. +49 (0)2331 62 45-0 • Fax +49 (0)2331 62 45-200 • Email info@eurotec.team
www.eurotec.team

PRODUCT DATA SHEET PANELTWISTEC AG

Paneltwistec AG, countersunk head screw, blue galvanised steel			
Art. no.	Dimensions Ød x L [mm]	Drive	PU
945583	6.0 x 60	TX30 •	200
945584	6.0 x 70	TX30 •	200
945632	6.0 x 80	TX30 •	200
945633	6.0 x 90	TX30 •	100
945634	6.0 x 100	TX30 •	100
945635	6.0 x 110	TX30 •	100
945636	6.0 x 120	TX30 •	100
945637	6.0 x 130	TX30 •	100
945638	6.0 x 140	TX30 •	100
945639	6.0 x 150	TX30 •	100
945640	6.0 x 160	TX30 •	100
945641	6.0 x 180	TX30 •	100
945642	6.0 x 200	TX30 •	100
945643	6.0 x 220	TX30 •	100
945644	6.0 x 240	TX30 •	100
945645	6.0 x 260	TX30 •	100
945646	6.0 x 280	TX30 •	100
945647	6.0 x 300	TX30 •	100
944715	8.0 x 80	TX40 •	50
944716	8.0 x 100	TX40 •	50
944717	8.0 x 120	TX40 •	50
944718	8.0 x 140	TX40 •	50
944719	8.0 x 160	TX40 •	50
944720	8.0 x 180	TX40 •	50
944721	8.0 x 200	TX40 •	50
944722	8.0 x 220	TX40 •	50
944723	8.0 x 240	TX40 •	50
944724	8.0 x 260	TX40 •	50
944725	8.0 x 280	TX40 •	50
944726	8.0 x 300	TX40 •	50
944727	8.0 x 320	TX40 •	50
944728	8.0 x 340	TX40 •	50
944729	8.0 x 360	TX40 •	50
944730	8.0 x 380	TX40 •	50
944731	8.0 x 400	TX40 •	50
944732	8.0 x 420	TX40 •	25
944733	8.0 x 440	TX40 •	25
944734	8.0 x 460	TX40 •	25
944735	8.0 x 480	TX40 •	25
944736	8.0 x 500	TX40 •	25
944737	8.0 x 550	TX40 •	25
944739	8.0 x 600	TX40 •	25
945687	10 x 100	TX50 •	50
945688	10 x 120	TX50 •	50
945689	10 x 140	TX50 •	50
945690	10 x 160	TX50 •	50

© by E.u.r.o.Tec GmbH · Last updated 04/2023 · Subject to changes, additions, typesetting and printing errors.

E.u.r.o.Tec GmbH • Unter dem Hofe 5 • 58099 Hagen, Germany
Tel. +49 (0)2331 62 45-0 • Fax +49 (0)2331 62 45-200 • Email info@eurotec.team
www.eurotec.team

PRODUCT DATA SHEET PANELTWISTEC AG

Paneltwistec AG, countersunk head screw, blue galvanised steel			
Art. no.	Dimensions Ød x L [mm]	Drive	PU
945691	10 x 180	TX50 •	50
945692	10 x 200	TX50 •	50
945693	10 x 220	TX50 •	50
945694	10 x 240	TX50 •	50
945695	10 x 260	TX50 •	50
945696	10 x 280	TX50 •	50
945697	10 x 300	TX50 •	50
945698	10 x 320	TX50 •	50
945699	10 x 340	TX50 •	50
945703	10 x 360	TX50 •	50
945709	10 x 380	TX50 •	50
945711	10 x 400	TX50 •	50
100036	10 x 420	TX50 •	25
100037	10 x 440	TX50 •	25
100038	10 x 460	TX50 •	25
100039	10 x 480	TX50 •	25
100040	10 x 500	TX50 •	25
100041	10 x 550	TX50 •	25
100042	10 x 600	TX50 •	25

© by E.u.r.o.Tec GmbH · Last updated 04/2023 · Subject to changes, additions, typesetting and printing errors.

E.u.r.o.Tec GmbH • Unter dem Hofe 5 • 58099 Hagen, Germany
Tel. +49 (0)2331 62 45-0 • Fax +49 (0)2331 62 45-200 • Email info@eurotec.team
www.eurotec.team

PRODUCT DATA SHEET PANELTWISTEC AG

Paneltwistec AG, washer head screw, blue galvanised steel			
Art. no.	Dimensions Ød x L [mm]	Drive	PU
946158	4.0 x 40	TX20	500
946159	4.0 x 50	TX20	500
946160	4.0 x 60	TX20	500
946161	4.5 x 50	TX20	200
946162	4.5 x 60	TX20	200
946163	4.5 x 70	TX20	200
946037	5.0 x 50	TX25	200
946038	5.0 x 60	TX25	200
946039	5.0 x 70	TX25	200
946040	5.0 x 80	TX25	200
946042	5.0 x 100	TX25	200
945947	6.0 x 30	TX30	100
945948	6.0 x 40	TX30	100
945712	6.0 x 50	TX30	100
945713	6.0 x 60	TX30	100
945716	6.0 x 70	TX30	100
945717	6.0 x 80	TX30	100
945718	6.0 x 90	TX30	100
945719	6.0 x 100	TX30	100
945720	6.0 x 110	TX30	100
945721	6.0 x 120	TX30	100
945722	6.0 x 130	TX30	100
945723	6.0 x 140	TX30	100
945724	6.0 x 150	TX30	100
945725	6.0 x 160	TX30	100
945726	6.0 x 180	TX30	100
945727	6.0 x 200	TX30	100
945728	6.0 x 220	TX30	100

© by E.u.r.o.Tec GmbH · Last updated 04/2023 · Subject to changes, additions, typesetting and printing errors.

E.u.r.o.Tec GmbH • Unter dem Hofe 5 • 58099 Hagen, Germany
Tel. +49 (0)2331 62 45-0 • Fax +49 (0)2331 62 45-200 • Email info@eurotec.team
www.eurotec.team

PRODUCT DATA SHEET PANELTWISTEC AG

Paneltwistec AG, washer head screw, blue galvanised steel			
Art. no.	Dimensions Ød x L [mm]	Drive	PU
945729	6.0 x 240	TX30 •	100
945730	6.0 x 260	TX30 •	100
945731	6.0 x 280	TX30 •	100
945732	6.0 x 300	TX30 •	100
945806	8.0 x 60	TX40 •	50
944588	8.0 x 80	TX40 •	50
944589	8.0 x 100	TX40 •	50
944590	8.0 x 120	TX40 •	50
944591	8.0 x 140	TX40 •	50
944592	8.0 x 160	TX40 •	50
944593	8.0 x 180	TX40 •	50
944594	8.0 x 200	TX40 •	50
944595	8.0 x 220	TX40 •	50
944596	8.0 x 240	TX40 •	50
944597	8.0 x 260	TX40 •	50
944598	8.0 x 280	TX40 •	50
944599	8.0 x 300	TX40 •	50
944600	8.0 x 320	TX40 •	50
944601	8.0 x 340	TX40 •	50
944602	8.0 x 360	TX40 •	50
944603	8.0 x 380	TX40 •	50
944604	8.0 x 400	TX40 •	50
944605	8.0 x 420	TX40 •	25
944606	8.0 x 440	TX40 •	25
944607	8.0 x 460	TX40 •	25
944608	8.0 x 480	TX40 •	25
944609	8.0 x 500	TX40 •	25
944610	8.0 x 550	TX40 •	25
944611	8.0 x 600	TX40 •	25
945750	10.0 x 80	TX50 •	50
945751	10.0 x 100	TX50 •	50
945752	10.0 x 120	TX50 •	50
945753	10.0 x 140	TX50 •	50
945754	10.0 x 160	TX50 •	50
945755	10.0 x 180	TX50 •	50
945756	10.0 x 200	TX50 •	50
945757	10.0 x 220	TX50 •	50
945758	10.0 x 240	TX50 •	50
945759	10.0 x 260	TX50 •	50
945760	10.0 x 280	TX50 •	50
945761	10.0 x 300	TX50 •	50
945762	10.0 x 320	TX50 •	50
945763	10.0 x 340	TX50 •	50
945764	10.0 x 360	TX50 •	25
945765	10.0 x 380	TX50 •	25
945766	10.0 x 400	TX50 •	25

© by E.u.r.o.Tec GmbH · Last updated 04/2023 · Subject to changes, additions, typesetting and printing errors.

E.u.r.o.Tec GmbH • Unter dem Hofe 5 • 58099 Hagen, Germany
Tel. +49 (0)2331 62 45-0 • Fax +49 (0)2331 62 45-200 • Email info@eurotec.team
www.eurotec.team

PRODUCT DATA SHEET PANELTWISTEC AG

Paneltwistec AG, washer head screw, blue galvanised steel			
Art. no.	Dimensions Ød x L [mm]	Drive	PU
100019	10.0 x 420	TX50 •	25
100020	10.0 x 440	TX50 •	25
100021	10.0 x 460	TX50 •	25
100022	10.0 x 480	TX50 •	25
100023	10.0 x 500	TX50 •	25
100024	10.0 x 550	TX50 •	25
100025	10.0 x 600	TX50 •	25

DRAWINGS

- Paneltwistec AG, countersunk head screw, blue galvanised steel

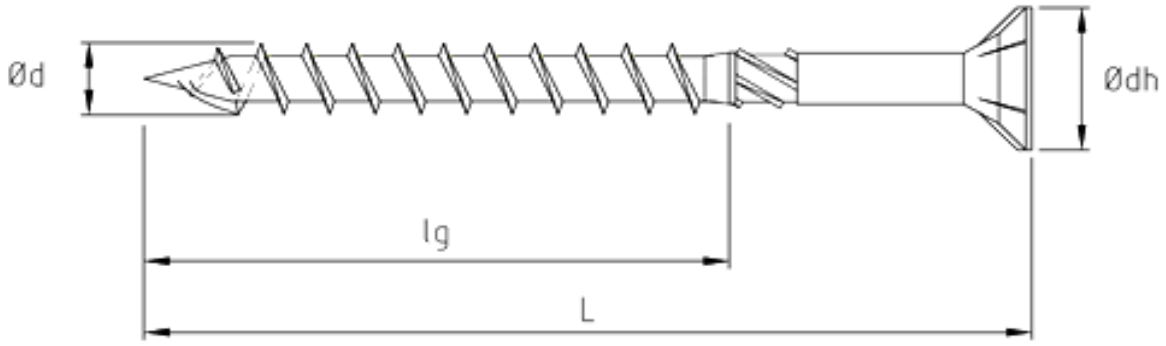

- Paneltwistec AG, washer head screw, blue galvanised steel

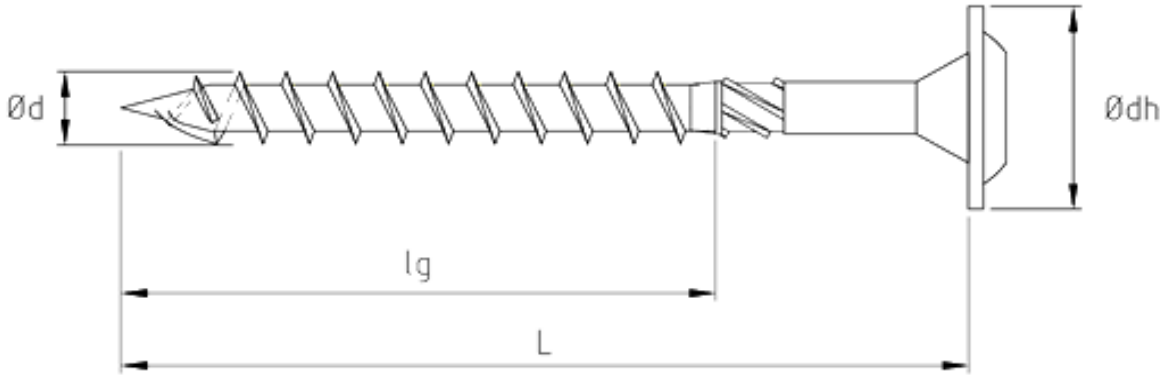

If you are not familiar with this product's application, and particularly with the product's intended use, please contact our Application Technology department (technik@eurotec.team).

© by E.u.r.o.Tec GmbH · Last updated 04/2023 · Subject to changes, additions, typesetting and printing errors.

E.u.r.o.Tec GmbH • Unter dem Hofe 5 • 58099 Hagen, Germany
Tel. +49 (0)2331 62 45-0 • Fax +49 (0)2331 62 45-200 • Email info@eurotec.team
www.eurotec.team